SEVEN SENSOR SOLUTIONS

3S-RG

Rain Gauge

USER MANUAL

USER MANUAL TABLE OF CONTENTS

1. Introduction **2**
2. Rain Gauge Installation **2**
2.1. Unpacking and Control **3**
2.2. Site Requirements and Considerations **3**
2.3. Preparation of Materials to Be Used in Installation **4**
2.4. Installation **5**
2.5. Inspection and Maintenance **5**
3. Calibration **6**
4. Connections **6**
4.1. Rain Gauge (3S-RG-MB) **6**
4.2. Pulse Rain Gauge (3S-RG-PLS) **7**
5. Communication **7**
5.1. 3S-RG-MB Configuration Tool **7**
5.2. Modbus Map **7**
6. Contact Details **8**

Waste Disposal

This symbol indicates that the product is subject to European Union regulations on separate waste disposal. This applies to both the product itself and any accessories bearing the same symbol. Such products must not be disposed of as unsorted household waste.

Note: *SEVEN reserves the right to make changes on this document without prior notice.*

Pinarcay OSB Mahallesi 11. Cadde, No: 35, Corum Organize Sanayi Bolgesi 19200 Merkez / Corum / Türkiye
• **Phone:** +90 364 230 1233 • **Website:** www.sevensensor.com • **Email:** sales@sevensensor.com

Revision 1.0 / **Created** 13.07.2026

1. Introduction

The Rain Gauge is part of the SEVEN meteorological sensor series which includes professional and intelligent measurement sensors with a digital interface for environmental and industrial applications such as photovoltaic installations.

Rain Gauge | Digital Counter | Bird Spikes

Figure 1 – Sensor and Accessories

It is designed to measure rainfall accurately using a 200 cm² collection area and a reed relay that works on the tipping bucket principle.

Depending on the input requirements, the measured rainfall data is transmitted to data loggers and receiver units either as pulse signals or over a 3-wire RS485 line using the Modbus RTU protocol.

SEVEN products use reliable, high-quality components to deliver accurate meteorological data for environmental and industrial applications. They are specifically designed to meet the requirements of PV plant and meteorological monitoring systems.

With the digital counter, you can monitor the total pulse count and easily calculate the rainfall amount manually, without the need for an external data logger.

The bird spikes physically stops birds from perching on the sensor. This minimizes contamination and extends the service life of the device. It reduces maintenance frequency and helps lower operational costs.

Note: *The bird spikes and digital counter are provided optionally upon the customer's request.*

2. Rain Gauge Installation

It is suggested that the system be operated at ground level to make sure that all components are working properly prior to installation. A general diagram of the progress of the installation steps is given below.

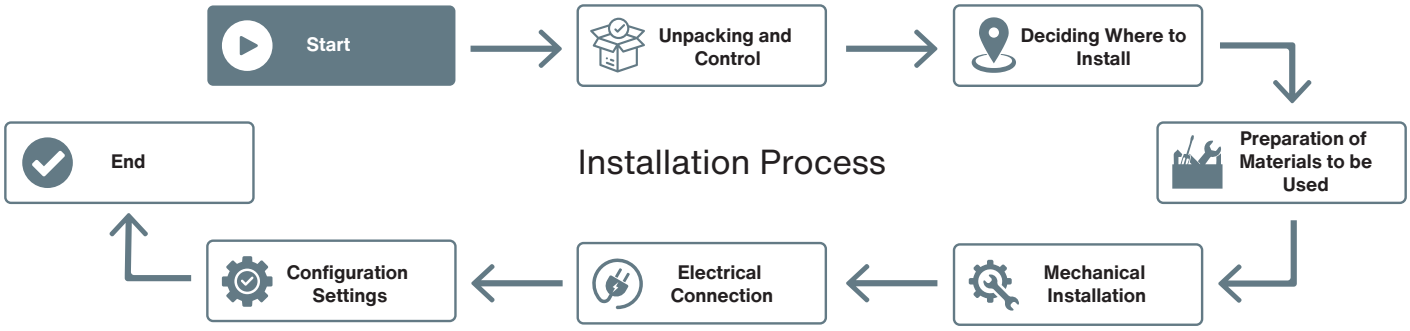

Figure 2 – Installation Process

Pinarcay OSB Mahallesi 11. Cadde, No: 35, Corum Organize Sanayi Bolgesi 19200 Merkez / Corum / Türkiye
• **Phone:** +90 364 230 1233 • **Website:** www.sevensensor.com • **Email:** sales@sevensensor.com

Revision 1.0 / **Created** 13.07.2026

2.1. Unpacking and Control

Upon receipt of the product, it must be carefully checked whether the package content is complete.

SEVEN Sensor must be contacted if any of the components are missing, damaged or defective.

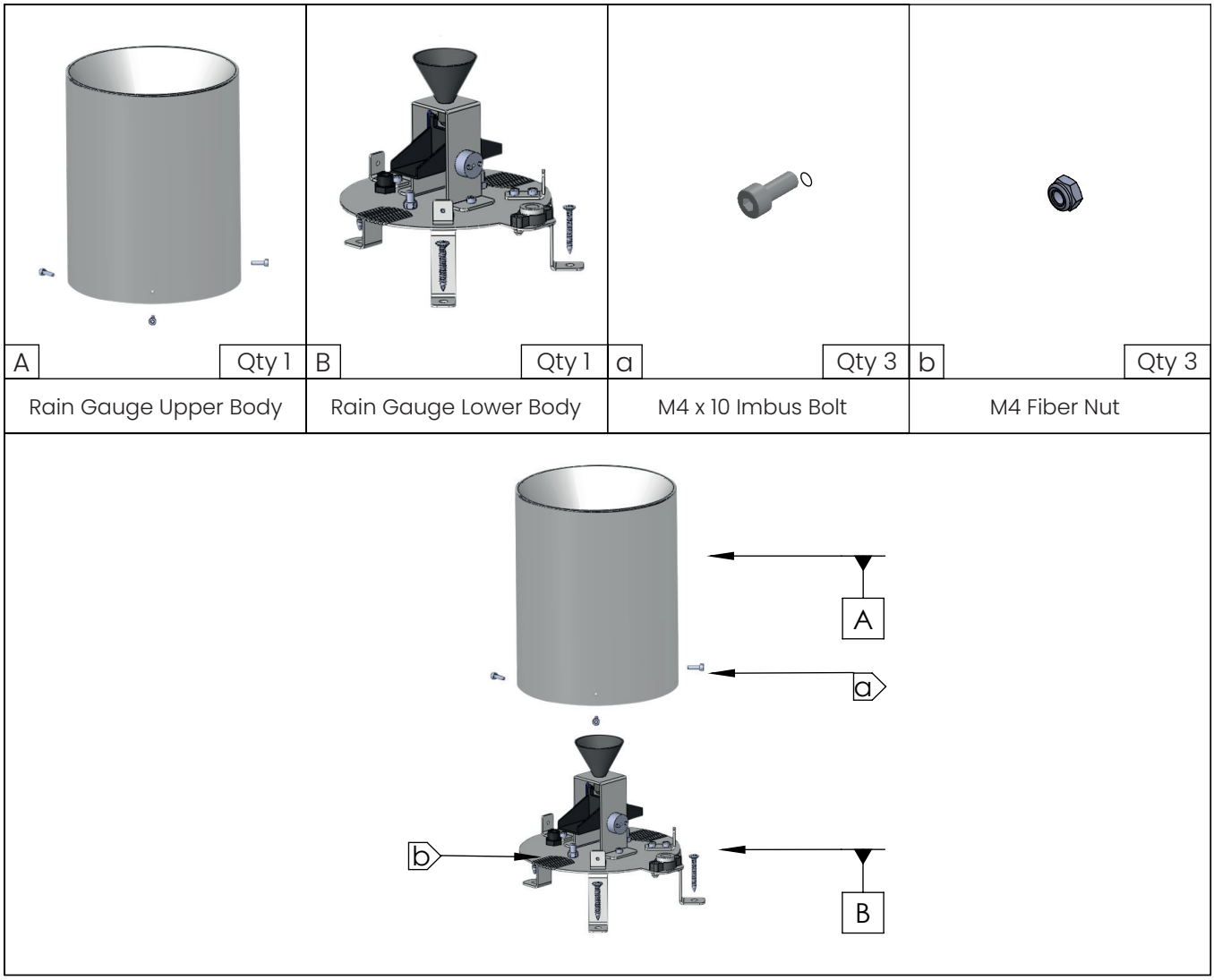

Figure 3 – Rain Gauge Package Contents
(The sensor is shown disassembled. You can take it apart by removing the 3 Imbus bolts.)

Note: *The product is shipped fully assembled.*

2.2. Site Requirements and Considerations

Each site is different and has its unique challenges. For this reason, the product installation may differ in each site. First it should be decided where the product will be installed.

In general, do not place the Rain Gauge on sloped surfaces.

The rain gauge should be positioned at least 2 meters away from any obstacle. According to the German Weather Service (DWD), it should be installed at a distance equal to the height of the obstacle, or according to the World Meteorological Organization (WMO), at a distance equal to twice the height of the obstacle. It is recommended to install the sensor at a distance greater than twice the height of surrounding obstacles.

Pinarcay OSB Mahallesi 11. Cadde, No: 35, Corum Organize Sanayi Bolgesi 19200 Merkez / Corum / Türkiye
• **Phone:** +90 364 230 1233 • **Website:** www.sevensensor.com • **Email:** sales@sevensensor.com

Revision 1.0 / **Created** 13.07.2026

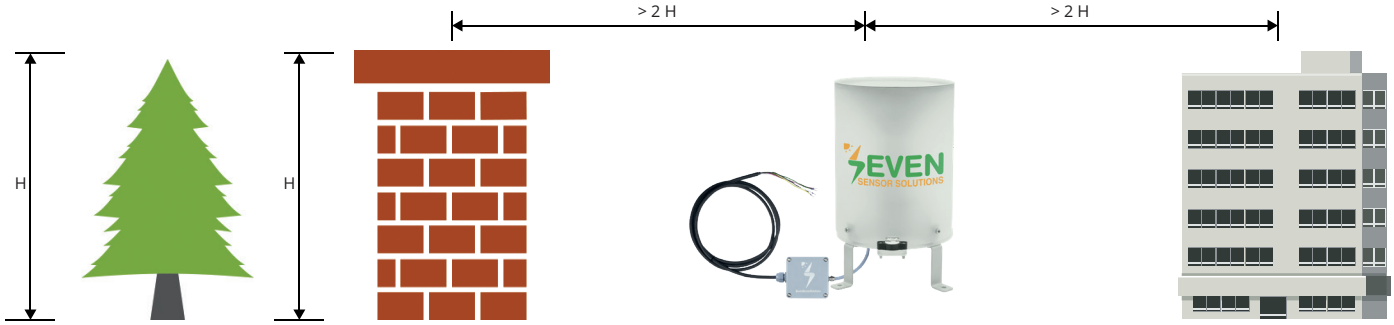

Figure 4 – Deciding where to Install

Choose the installation location so that contamination of the Rain Gauge by debris such as falling leaves is prevented as much as possible.

2.3. Preparation of Materials to Be Used in Installation

The materials needed during installation are supplied by SEVEN. The user should only prepare the following hand tools and personal protective equipment.

Materials	
Gloves	Tape Measure
6 mm Concrete Screw Drill Bit	Drill

Figure 5 – Materials to Be Used in Installation

Pinarcay OSB Mahallesi 11. Cadde, No: 35, Corum Organize Sanayi Bolgesi 19200 Merkez / Corum / Türkiye
• **Phone:** +90 364 230 1233 • **Website:** www.sevensensor.com • **Email:** sales@sevensensor.com

Revision 1.0 / **Created** 13.07.2026

2.4. Installation

Installation can be easily completed by qualified personnel by following SEVEN's instructions. To install the Rain Gauge:

During assembly, use the built-in bubble level on the lower body as a reference. **It is extremely important to adjust the device so that the spirit level is balanced.** If the spirit level is not properly adjusted, the sensor will not perform accurate measurements.

Figure 6 – Spirit Level on the Sensor Structure

2.5. Inspection and Maintenance

The SEVEN Rain Gauge filter should be cleaned periodically according to field conditions. Check whether anything is blocking the filter or stopping water from flowing into the sensor, and clean it if needed. Follow these steps to clean and maintain the Rain Gauge:

- Use a soft, dry cloth to remove dirt and debris from the Rain Gauge.
- If the Rain Gauge is very dirty, clean it gently with a slightly damp cloth.
- Do not use harsh chemicals or abrasive materials to clean the Rain Gauge, as they can damage the sensor.
- Check the sensor for any signs of damage or wear. If the sensor is damaged, contact the SEVEN technical team for assistance.

Periodically check the tightness of the fasteners, the condition of the wiring, any damage, deterioration, or disconnection of the sensors and electrical enclosures, signs of moisture or pests in the enclosures, loose cable connections, brittle fasteners, and any other potential problems.

In addition to the maintenance and checks above, disassemble the sensor at least once a year to keep it measuring accurately and to extend its life (remove the 3 Imbus bolts to take it apart, as shown in Figure 3) and fully clean the dust, dirt, and pests that build up in the inner chamber and the tipping bucket. During cleaning, do not interfere with the tipping bucket or the measuring mechanisms. Do not change any settings and do not disturb the balance of the bucket.

Note: *SEVEN Sensor recommends a periodic maintenance interval of 3 months.*

Pinarcay OSB Mahallesi 11. Cadde, No: 35, Corum Organize Sanayi Bolgesi 19200 Merkez / Corum / Türkiye
• **Phone:** +90 364 230 1233 • **Website:** www.sevensensor.com • **Email:** sales@sevensensor.com

Revision 1.0 / **Created** 13.07.2026

3. Calibration

The Tipping Bucket Rain Gauge with Modbus RTU and Pulse output is factory-calibrated and needs no further calibration. If you suspect the Rain Gauge is not measuring rainfall accurately, contact SEVEN Sensor Solutions for assistance.

4. Connections

The SEVEN Rain Gauge is designed on the Plug & Run principle. The sensor connection box has waterproof, UV-resistant connectors. The minimum bending radius for the cables is 5 mm.

The supply voltage for the Rain Gauge is 12 to 30 V DC. Operation with a voltage supply of 24 V is recommended.

The 3S-RG-MB Modbus Rain Gauge has an electrically isolated, half-duplex, 3-wire RS485 interface for configuration, communication, and firmware updates. The 3S-RG-PLS Rain Gauge communicates through a pulse output.

Always route the communication and power cables of the Rain Gauge separately from AC/DC cables.

Note: *The installation and electrical connections of SEVEN sensors must be carried out by a qualified electrician.*

4.1. Rain Gauge (3S-RG-MB)

Wire Assignment for Power and Communication	
Signal Ground	Red
RS485 A / Data (+)	Green
RS485 B / Data (-)	Yellow
Power (+)	Brown
Power (-)	White
Protective Grounding	Black

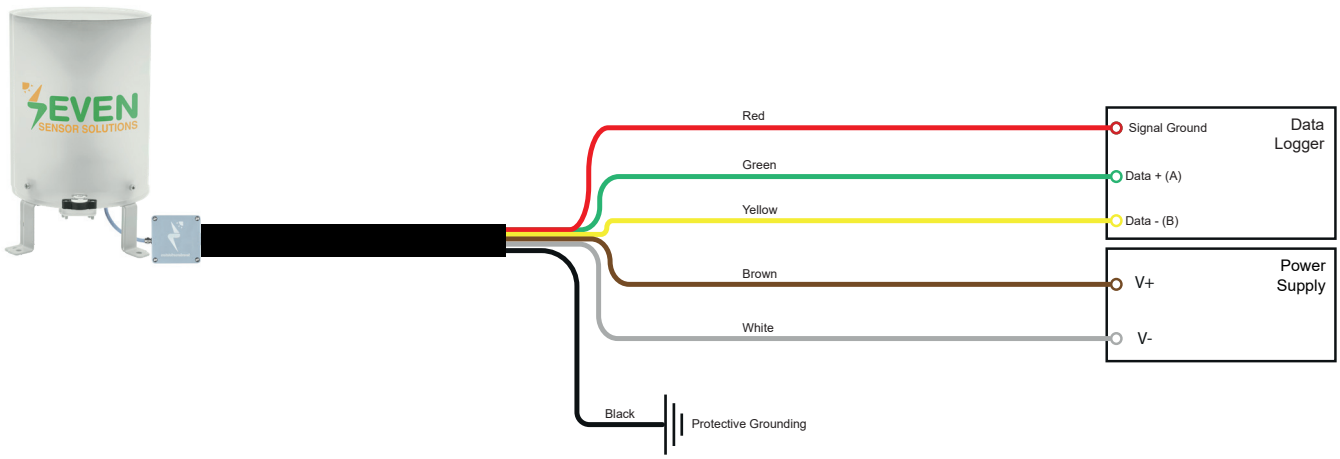

Figure 7 – Wire Assignment for Power and Communication for the Modbus Rain Gauge (3S-RG-MB)

Pinarcay OSB Mahallesi 11. Cadde, No: 35, Corum Organize Sanayi Bolgesi 19200 Merkez / Corum / Türkiye
• **Phone:** +90 364 230 1233 • **Website:** www.sevensensor.com • **Email:** sales@sevensensor.com

Revision 1.0 / **Created** 13.07.2026

4.2. Pulse Rain Gauge (3S-RG-PLS)

Wire Assignment for Power and Communication	
Pulse 1	Brown
Pulse 2	White

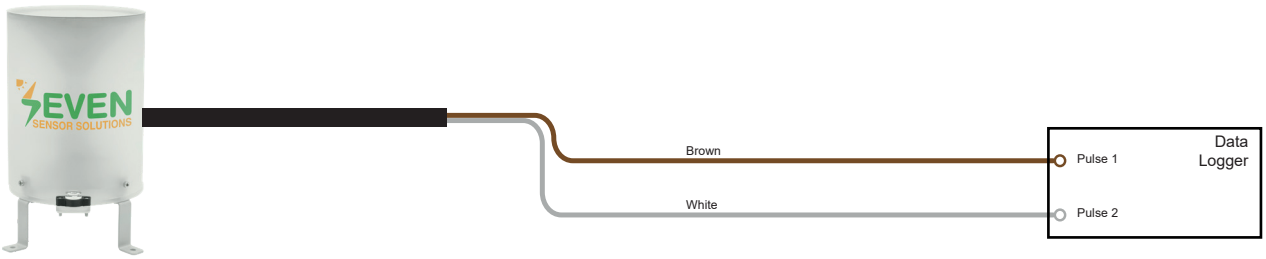

Figure 8 – Wire Assignment for Power and Communication for the Pulse Rain Gauge (3S-RG-PLS)

5. Communication

After the 3S-RG-MB Modbus Rain Gauge has been correctly installed and connected, the sensor starts measuring autonomously.

Attention must be paid to the following points:

- A measurement test must be performed on the Rain Gauge using the 3S-RG-MB Configuration Tool, and its proper operation in the field must be verified.
- If multiple Modbus devices are operated on the same network, a unique device ID must be assigned to each device.

5.1. 3S-RG-MB Configuration Tool

The 3S-RG-MB Configuration Tool is a software tool used to test 3S-RG-MB communication and set the Modbus parameters.

For configuration and testing, you need a Windows® PC with a serial bus interface set as a serial COM port, the 3S-RG-MB Configuration Tool software, and a USB-to-RS485 converter.

For more details, please refer to the 3S-RG-MB Configuration Tool User Manual:

https://sevensensor.com/files/d/en/3S-RG-MB_Configuration_Tool_v1.0.pdf

5.2. Modbus Map

The Modbus addresses and features required to configure the Modbus Rain Gauge with systems such as data loggers are specified in the table below.

3S-RG-MB MODBUS INPUT REGISTER MAP					
ID-Dec	ID-Hex	Register	Data Type	Measurement Range	Resolution
3003**6**	0X24	Rainfall Intensity (Hour)	uint16_t	0-900 mm/hour	0,1
3003**7**	0x25	Rainfall Intensity (Minute)	uint16_t	0-15 mm/minute	0,001
3003**8**	0x26	Rainfall Intensity (Second)	uint16_t	0-0,25 mm/second	0,001

Table 1 - Modbus Addresses and Specifications

Pinarcay OSB Mahallesi 11. Cadde, No: 35, Corum Organize Sanayi Bolgesi 19200 Merkez / Corum / Türkiye
• **Phone:** +90 364 230 1233 • **Website:** www.sevensensor.com • **Email:** sales@sevensensor.com

Revision 1.0 / **Created** 13.07.2026

Note: *The table above lists the addresses that need to be monitored by the user for the Rain Gauge software version 3. If additional Modbus and SunSpec addresses or the software-specific features of these addresses are required, you can download the detailed Modbus map from the link below.*

https://www.sevensensor.com/download

6. Contact Details

Please feel free to contact us if you face any difficulties during installation or configuration.

Address: Pinarcay OSB Mahallesi 11. Cadde, No: 35, Corum Organize Sanayi Bolgesi 19200 Merkez/Corum

Phone: +90 553 228 74 55

Email: teknik@sevensensor.com

Website: www.sevensensor.com